E.M.I. CATHODE-RAY TELEVISION TRANSMISSION TUBES*

By J. D. McGEE, M.Sc., Ph.D., and H. G. LUBSZYNSKI, Dr.Ing.†

(*Paper first received* 20*th July, and in revised form* 22*nd October*, 1938; *read before the* WIRELESS SECTION 7*th December*, 1938.)

SUMMARY

This paper gives a short history of the development of two types of cathode-ray tube now used for transmission of television pictures. The construction and mechanism of operation of the "Emitron" is described and its limitations are discussed. A further development, namely the "Super-Emitron," is then described, and its mechanism of operation and its performance are compared with those of the "Emitron." Some other types of transmitting tubes, which have been tested experimentally in the course of this work, are described briefly.

INTRODUCTION

The earliest suggestion that the cathode-ray tube could be used for the transmission of pictures by television was made by Campbell Swinton‡ in 1908. He realized the limitation of mechanical scanning methods and saw in the then recently-discovered cathode rays a practically inertialess scanning means.§ He proposed to focus an image of the scene to be transmitted on to a mosaic of photo-electric cells. The elementary cells would become electrically charged due to the liberation of electrons from them by the light, and could be periodically discharged by a beam of electrons which scanned over them. He developed this idea in greater detail in 1911,‖ and in 1926¶ he attempted to carry it out experimentally, using selenium as a photo-sensitive mosaic in a manner similar to that recently adopted successfully by Miller and Strange.** At about this time the number of suggestions for cathode-ray tubes for television picture transmission increases rapidly in the patent literature.††

Apart from cathode-ray scanning the most important development in television transmitting tubes is the introduction of charge storage. This paper is chiefly concerned with transmitting tubes employing this principle.

The essence of the principle is that during part at least of the picture-frame period the photo-electric emission due to the light from each picture point of the image is stored up as a charge on a mosaic of photo-electric cells, each associated with a condenser. The condensers are discharged in sequence by some switching mechanism such as a beam of electrons; the sequence of electrical pulses thus produced constitutes the "picture signal." This principle appears to be implied in Campbell Swinton's suggestions. For example, in his presidential address to the Röntgen Society on the 7th November, 1911,‡‡ he makes the following remarks about the mosaic of photo-electric cells which he proposed to employ in the transmitting tube he suggested: "It is further to be noted that as each of the metallic cubes in the screen acts as an independent photo-electric cell, and is only called upon to act once in a tenth of a second, the arrangement has obvious advantages over other arrangements that have been suggested in which a single photo-electric cell is called upon to produce the many thousands of separate impulses that are required to be transmitted through the line wire per second, a condition which no known form of photo-electric cell will admit of. Again, it may be pointed out that sluggishness on the part of the metallic cubes . . . in acting photo-electrically in no wise interferes with the correct transmission and reproduction of the image, provided all portions of the image are at rest."

Though the storage principle is not mentioned explicitly in this, or any other paragraph, of Campbell Swinton's writings on television, it is difficult to escape the conclusion that it is this principle he had in mind in the first of the paragraphs quoted. This is borne out by the specific and separate reference to the sluggishness of the photo-electric effect in the paragraph immediately following. This interpretation of Campbell Swinton's suggestion is in agreement with that given in 1932 in the excellent handbook on television edited by Prof. Fritz Schröter.‡

These early schemes were undoubtedly impracticable at the time they were suggested, and it was only after 20 years of technical progress that it became possible to put them into practice. Furthermore, all the schemes proposed seemed to be theoretically unsound§ and it is probably true to say that transmitting tubes of this kind were in operation experimentally for a considerable time before the essential feature of their mechanism of signal production was understood.

As far as it has been possible to ascertain, the first disclosure in the patent literature of a photo-electric mosaic electrode is due to Zworykin in 1925,‖ but it seems significant that though the charge-storage principle is used it is not mentioned in the claims. In fact it appears that this fundamental invention was never patented, although in subsequent publications its importance is emphasized.

The first published description of a successfully operated television transmitting tube employing both cathode-ray scanning and charge storage was due to Zworykin¶ in 1933. Though difficult to manufacture and operate, this transmitting tube, named the "Iconoscope" by Zworykin, is a great advance on the earlier mechanical methods. Only 5 % to 10 % of the possible increase in sensitivity due to charge storage is realized in this tube, nevertheless it is sufficiently sensitive to enable high-

* Reprinted from *Journal I.E.E.*, 1939, vol. 84, p. 468.
† Electric and Musical Industries, Ltd.
‡ See Reference (1).
§ For an appreciation of the work of Campbell Swinton on television see an article in *Wireless World*, 1935, vol. 8, p. 591; also *Nature*, 1936, vol. 138, p. 674.
‖ See Reference (2). ¶ *Ibid.*, (3).
** *Ibid.*, (4). †† *Ibid.*, (5). ‡‡ *Ibid.*, (2).
‡ See Reference (6). § *Ibid.*, (6). ‖ *Ibid.*, (7). ¶ *Ibid.*, (8).

definition pictures of studio and outdoor scenes with moderate illumination to be televised.

About a year before Zworykin published his description of the Iconoscope, experiments had been begun in the E.M.I. Research Laboratories on the charge-storage type of transmitting tube. These experiments, carried on independently of Zworykin and his co-workers, soon showed that it was possible to generate picture signals in this way. Briefly, the method employed was as follows. An aluminium plate was coated with a thin layer of aluminium oxide by anodic oxidation, and a mosaic of patches of silver was formed on the surface of the oxide by evaporating silver on to the oxide surface through a grid.* This mosaic was mounted as target in a tube, which was then evacuated, and the silver patches were oxidized and activated photo-electrically with caesium. When an optical image was focused on the mosaic while it was being scanned by an electron beam, picture signals corresponding to the optical image were obtained and an image was reproduced on the screen of a cathode-ray tube.

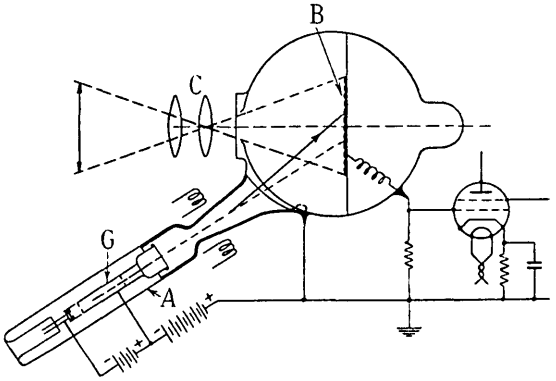

Fig. 1

These experiments led to the development of the Emitron, which is believed to be different in several respects from the Iconoscope and has been in regular service at the London Television Station since its inception in August, 1936. A further development is the "Super-Emitron,"† which was put into service for the first time during the outside broadcast from the Cenotaph in November, 1937. This tube shows a considerable increase in sensitivity and flexibility over the standard Emitron.

THE EMITRON

Construction

The main constructional features of an Emitron are shown in Fig. 1. A spherical bulb of Pyrex glass about $7\frac{1}{2}$ inches in diameter is provided with a neck A in which is fitted an electron gun G which directs a sharply-focused beam of electrons on to the photo-electric mosaic B. A polished flat glass window is sealed on to the bulb as shown, so that an undisturbed optical image of the scene to be transmitted may be focused on the mosaic by means of the lens system C.

* See Reference (9).
† "Super-Emitron" is the trade name which has been adopted for the improved type of transmitting tube described below.

The photo-electric mosaic is formed on the surface of a sheet of mica about 0·001 in. thick and 4 in. × 5 in. superficial dimensions. This sheet of mica is carefully selected for uniformity of thickness and freedom from blemishes of any kind. The reverse surface from that on which the mosaic is deposited is coated with a conducting, highly reflecting metallic layer, generally by painting on several coats of commercial "liquid silver." This sheet of mica is supported on a second circular sheet which fits closely into the bulb. The assembly is flexible and can be rolled into a cylinder while being inserted into the bulb, where it is fixed in position.

Electron Gun Design

A diagram of the electron gun used in the Emitron is shown in Fig. 2. The cathode A is of the indirectly-heated oxide-coated type and is placed immediately behind an aperture in a modulating electrode B. The first anode C extends from the modulator to a short distance within the second anode D, which is formed by depositing a layer of silver on the inside of the neck and part of the bulb, as shown.

Since the dimensions of the mosaic which is scanned by the electron beam are approximately 10 × 12·5 cm., the scanning lines being parallel to the longer sides of the rectangle, it follows that for a 405-line picture the scanning spot must ideally be 0·25 mm. in diameter. Since the scanning beam falls on the mosaic at an angle of 35° to the normal, the actual diameter of the electron pencil on

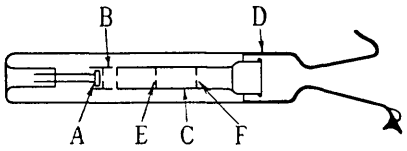

Fig. 2

reaching the mosaic surface must be kept less than about 0·20 mm. Referring again to Fig. 1, it is clear that the distance travelled by an electron from the main electron lens of the electron gun to the mosaic is greatest when the electron beam is at the top of the mosaic and least when it is at the bottom. Since the electron beam is in focus at one distance only from the electron lens it follows that if it is focused at the centre of the mosaic it will be slightly out of focus at both the top and the bottom, and the reproduced picture will lack detail in these regions. This can be corrected by using in the electron gun an auxiliary electrode which is modulated synchronously with the scanning fields in such a way as to change the focal length of the electron lens slightly—sufficiently to keep the beam in focus over the whole mosaic.*

It is found, however, that this can be achieved more simply by taking advantage of the fact that a comparatively small beam current of the order of 0·10 μA is required for scanning the mosaic. It is therefore possible to reduce the "aperture" of the electron lens to a very much smaller diameter than is possible in a cathode-ray tube for television reception, and consequently very much greater depth of focus of the electron beam can be

* See Reference (10).

obtained. Referring to Fig. 2, the aperture E limits the electron beam to a diameter of approximately 2 mm. in the region of the electron lens, which is about 40 mm. in diameter. The aperture F is provided to prevent most of the secondary electrons liberated from the walls of the gun or from the aperture E reaching the mosaic. If such stray secondary electrons reach the mosaic they reduce the efficiency of the tube and produce spurious signals which interfere with the required signals. The fact that a beam of small cross-section suffices has the further advantage that the electron lens need not be carefully corrected, since only a small portion of its cross-section is used.

The Mosaic Mounting

As above described, the mosaic is formed on a sheet of mica which is attached to a second sheet serving to anchor it to the bulb. This construction is not completely rigid and in practice it is often necessary to operate tubes under conditions where they are subjected to considerable vibration; for example, on a movable truck in a studio or in a high wind out of doors. It was soon found that such vibration produced spurious microphonic signals which could be divided into two fairly distinct classes, (1) a low-frequency signal at about 100 cycles per sec. and (2) a higher-frequency signal at about 10^4 cycles per sec. The low-frequency microphonics were found to be due to the vibration of the mica disc supporting the signal plate. Any considerable vibration of this kind would have the effect of throwing the optical image rapidly in and out of focus, and hence would result in a blurred picture.

In operation, the signal plate is held at a positive potential relative to the second anode, and the small changes in its capacitance to its surroundings due to vibration set up voltage fluctuations across the signal resistance. This was eliminated sufficiently for all practical purposes by anchoring the supporting mica disc to the glass walls at four points by soft damping wires.

The high-frequency microphonic signals were eventually traced to a similar effect due to movement between the signal plate and the surface of the mica disc on which it is supported. This movement is partly in the plane of the disc and partly normal to it, and the microphonic signals may be produced in two ways. Firstly, friction produces electrical charges between the signal plate and the mica surface. Slight movements of the signal plate normal to the surface of the supporting mica sheet produce changes of the capacitance between these two surfaces. Thus varying potential differences are set up which lead to spurious signals. Secondly, charges may be produced on the surface of the supporting mica sheet owing to electrical leakage over its surface. Any small movement of the surfaces normal to one another would then produce signals. This type of microphonic signal was effectively eliminated by covering the surface of the supporting mica disc, with which the signal plate is in contact, with a conducting metallic coating. This coating is connected electrically with the signal plate and hence held at the same potential.

Emitrons in which these precautions have been taken can be used under conditions where they are subjected to considerable vibration without microphonic signals being generated.*

The Mosaic Surface

The silver mosaic may be formed on the clean surface of the mica by depositing a continuous sheet of silver and causing this to aggregate by heating in air to a temperature of about 700° C.† If the layer is sufficiently thin it breaks up into a series of discrete areas under surface-tension action, even though the temperature be below that at which bulk silver melts. This phenomenon was first observed by Faraday and was investigated more fully by Beilby.‡ The process of aggregation can be clearly seen in the microphotographs shown in Fig. 3 (see Plate 1, facing page 134);§ these illustrate a series of layers of silver of decreasing thickness each heated to the same temperature. It is seen that when the silver is thick the effect of the heating is to cause a number of holes to appear. As the layer is made thinner these holes increase in size until they merge with one another, leaving islands of silver completely separated. With still thinner layers these islands disintegrate to form still smaller areas.

Exactly the same process is observed in a single silver layer as the temperature of baking is raised from a low value to about 700° C. At comparatively low temperatures (200°–300° C.) the holes appear; as the temperature is raised these increase in size until they merge, leaving the discrete mosaic areas which break up further as the temperature is raised still higher.

That this phenomenon is due to surface tension in the layer may be seen by comparing these photographs with those obtained by Beilby|| for the aggregation of oil films under surface-tension forces.

Although photo-electric mosaics formed in this way are in many ways satisfactory, there are a number of disadvantages such as the difficulty of ensuring that the mosaic, which must be formed before being sealed into the tube, is kept clean and free from spots and other blemishes.

A more satisfactory way of forming the mosaic will be described in a later communication by L. Klatzow.

Mechanism of Signal Production¶

When a photo-electric mosaic of the type described above is scanned by an electron beam of about 1 000 volts velocity, each primary electron liberates several secondary electrons from the surface. The behaviour of an insulated conducting target of mosaic character when bombarded by electrons may be shortly recapitulated. Fig. 4 shows a typical curve of the number of secondary electrons released per primary electron as a function of the velocity of the primary electrons. The curve possesses a maximum, the position of which, for most substances, lies between 300 and 400 electron volts. There are two values of the velocity of the primary electrons for which the secondary-emission coefficient is

* See Reference (11).
† *Ibid.*, (12).
‡ *Ibid.*, (13).
§ The authors are indebted to Dr. L. Klatzow, of the E.M.I. Research Department, for these photographs.
|| See Reference (13).
¶ The mechanism of signal production in the Iconoscope was recently discussed by Zworykin, Morton, and Flory (see *Proceedings of the Institute of Radio Engineers*, 1937, vol. 25, p. 1071).

unity, viz. those represented by the points A and B in Fig. 4. We may call A and B the "first and second cross-over points" respectively. Under the influence of the primary beam and the loss of secondaries the target takes up a certain equilibrium potential. There are three different points on the characteristic for which the potential of the target will be stable.

First, if the primaries hit the target with a velocity below that corresponding to A, they will charge the target negatively, until it stabilizes at the potential of the cathode from which the primary electrons emerge, i.e. at the potential represented by the point O on the curve.

The second possibility occurs when the velocity is between those corresponding to the points A and B. In this case the secondary-emission coefficient is greater than unity, and equilibrium will be attained when, for each primary electron striking the target, one secondary electron (of the number released) reaches the collecting electrode. This equilibrium potential depends mostly upon the geometrical configuration of the tube and the secondary-emission coefficient. The equilibrium potential of the target will be in the neighbourhood of that of the collecting anode—a few volts above or below.

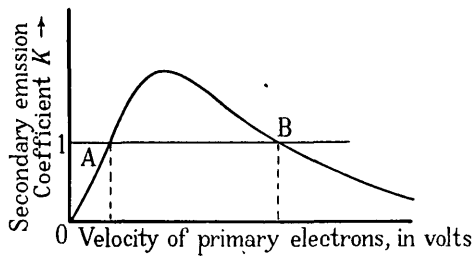

Fig. 4

The third possibility occurs when the primary electrons reach the target with a velocity greater than that corresponding to the second cross-over point B. In this case the number of secondaries released will be less than the number of primaries which strike the target, and the target potential will, therefore, become more negative until the primaries are decelerated to a velocity corresponding to the second cross-over point. When this point is reached one secondary electron will be released per primary and the potential of the target will be stable. In this case the equilibrium potential is independent of the potential of the collecting anode but has a value fixed with respect to that of the cathode. It is thus possible to set up a potential difference between the target and the collecting electrode.*

The problem is complicated when a target consisting of an insulator or of a mosaic of minute conducting elements deposited on an insulator is scanned by a fine pencil of electrons. This is the condition which occurs in the Emitron. The potential across the surface of the target will no longer be uniform but will vary from point to point, and from instant to instant as the scanning beam explores the surface. The average potential of the target at any instant will be determined by the secondary-emission coefficient of the surface and the geometry of the electrodes. For example, at a velocity of the primary electrons for which the ratio of secondaries to primaries is greater than 1, the potential will be such that on an average during at least one scan the number of secondaries arriving at the collecting electrode will be equal to the number of primaries which reach the mosaic. In the Emitron, where the collecting electrode is the second anode of the gun, it has been found that the average potential of the mosaic when scanned in the dark is about 1·5 volt negative with respect to the collecting anode. The value obtained by Zworykin* and his co-workers for the Iconoscope is in agreement with this figure.

On the other hand, the potential of an elementary area on the target of the size of the scanning spot will vary periodically as the beam scans the surface. Each primary electron liberates K secondaries which have a velocity distribution varying from almost zero to the velocity of the primary electrons, but the great majority of these secondaries have velocities of the order of 2 to 4 volts. It is clear that, if the point on the mosaic on which the beam impinges is initially uncharged, it will at first lose practically all the secondary electrons liberated from its surface, and consequently will begin to rise rapidly to a more positive potential. As it rises in potential the slower secondary electrons will find it impossible to escape to the surrounding parts of the mosaic, and finally the element will reach a potential such that only one secondary electron can escape per primary arriving. It is found that in this state the elements immediately under the electron beam are about 4 volts positive with respect to the surrounding parts of the mosaic. This rise in potential of a scanned mosaic element is shown in Fig. 5.

When the scanning beam has passed an element the latter will collect secondary electrons from other elements being scanned, and its potential will soon return to approximately the average potential.

It follows that there is quite a strong electric field between the mosaic element which has reached this positive potential under the scanning beam and the surrounding elements. Hence any photo-electrons liberated by the light from the elements that are about to be scanned will be collected by the elements that are being or have just recently been scanned, and the electric field is sufficient to saturate all such photo-electrons up to a distance of the order of 1 cm. in front of the scanning beam. Thus the scanning beam builds up a positive potential front as it scans over the mosaic, which in turn builds up a distribution of electrostatic charges in front of it, corresponding to the light distribution in the image, thus giving very efficient charge storage over a small fraction of the total frame period.

This phenomenon was called "line sensitivity" by Zworykin. In the authors' opinion the Emitron operates almost entirely on this line sensitivity. The integrating sensitivity, i.e. that part of the signal which is due to storage over the whole of the frame time, is comparatively low. This can be seen from the following observations.

A fast-moving object which moves in a direction parallel to the scanning lines is imaged on the receiving screen as a series of pictures, each of which is perfectly sharp, with no signal between the single pictures. This is due to the mosaic elements becoming substantially

* See Reference (14).

* See Reference (15).

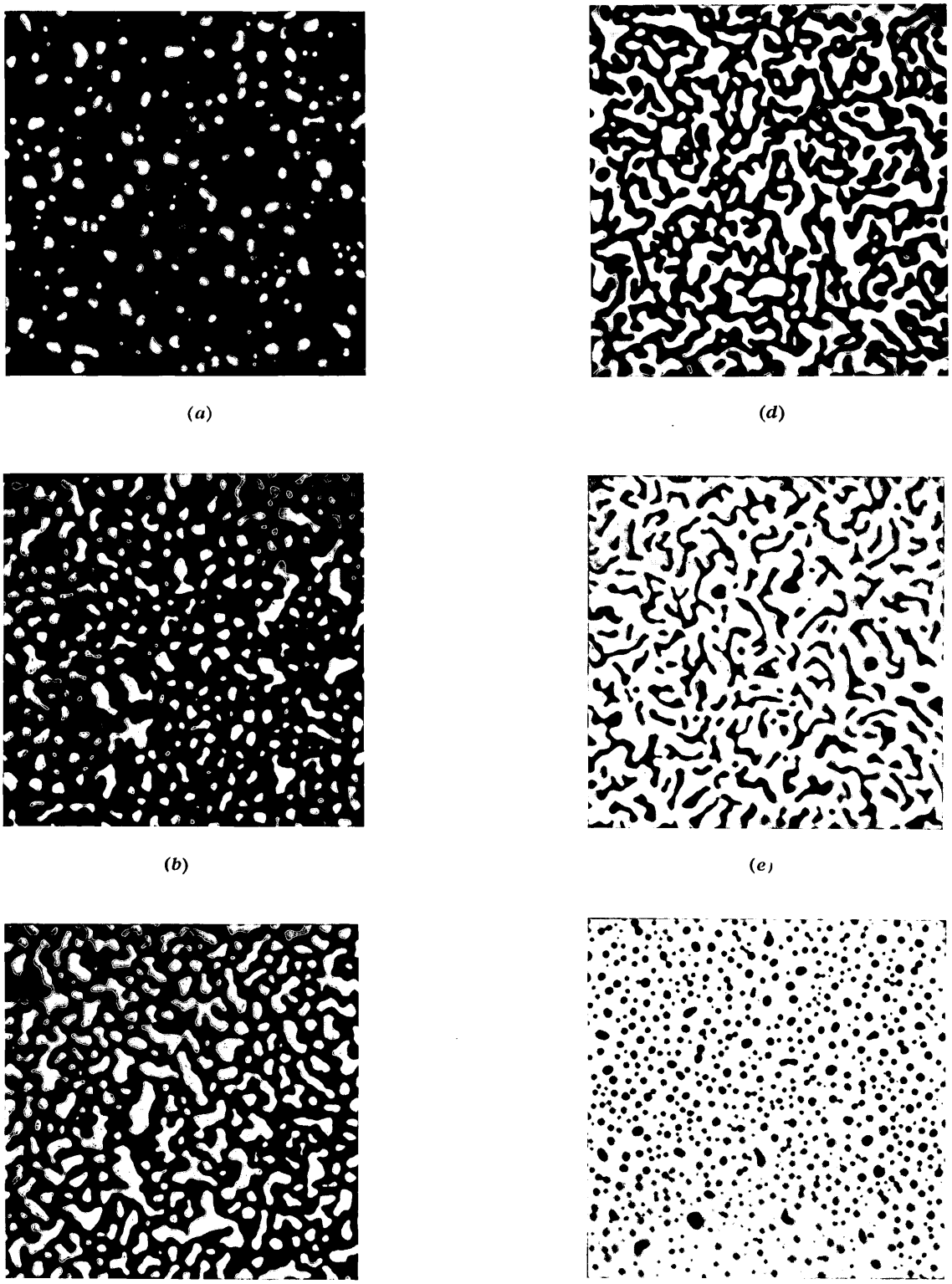

(*a*) (*d*)

(*b*) (*e*)

(*c*) (*f*)

Fig. 3

Fig. 7

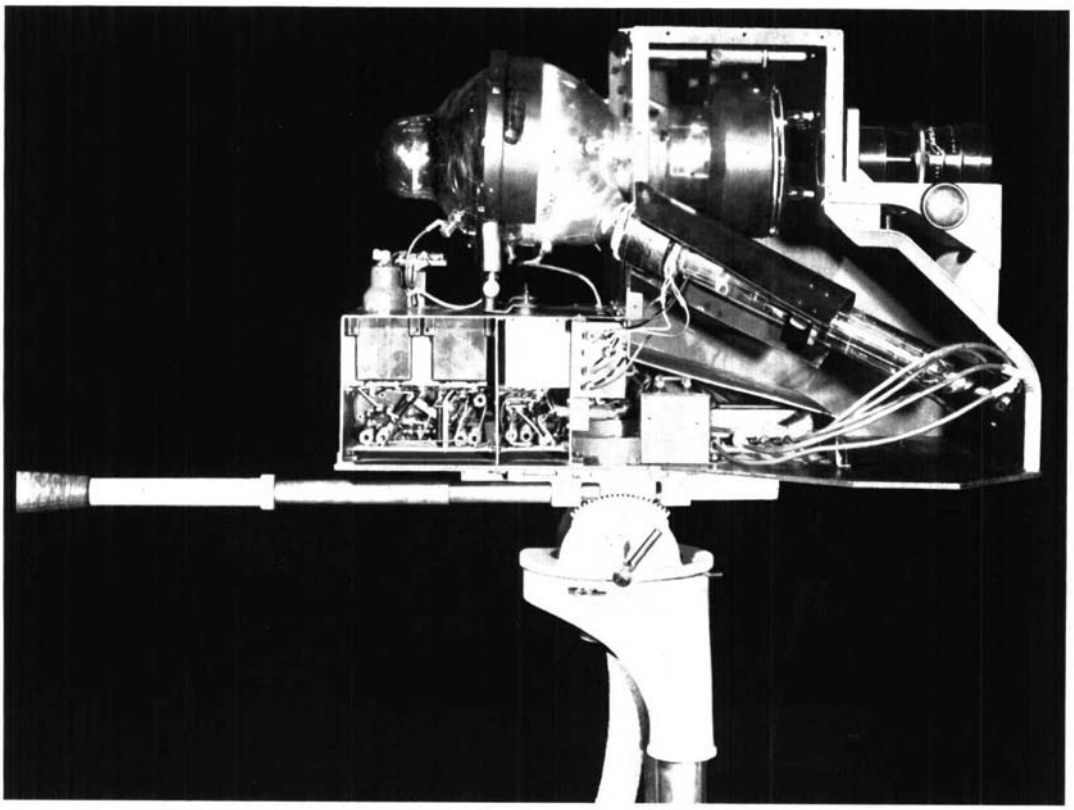

Fig. 8

sensitive only immediately before the scanning beam reaches them. If an integrating sensitivity were present to any appreciable degree, the picture of the object would have a sharp leading edge with a blurred trail behind extending to the leading edge of the next picture.

In transmitting pictures from cinematograph film it is found that if the image is projected continuously on to the mosaic while the electron beam is scanning the mosaic, very much smaller light intensity is required than if the separate pictures are projected on to the mosaic during the intervals between frames when the electron beam is suppressed. Even when allowance is made for the difference in the time that the mosaic is exposed to the light image, the efficiency of the tube appears to be of the order of 10 times greater in the former case.

Finally, the result of applying a positive potential to the collecting electrode leads to the same conclusion. It can be seen by reference to Fig. 5 that the actual picture signal is derived from the differences in the potential changes which occur when a dark and when an illuminated element is scanned by the beam. If the potential of the second anode, which acts as the collecting electrode in the Emitron, is suddenly raised to a positive potential with respect to the signal plate which is sufficient to ensure saturation of photo-electrons liberated from the mosaic, it is found that a strong signal is obtained, which slowly dies away. Now a signal can only be obtained if the stream of secondary electrons leaving the mosaic varies according to the distribution of light in the optical image. Hence, the secondary electron emission cannot be saturated, since then no signal would be produced, although the potential between the second anode and mosaic is sufficient to saturate slow electrons liberated from the mosaic in the absence of the scanning beam. It follows that the flow of secondary electrons from the mosaic to the second anode must be controlled by the potentials of the mosaic elements in the immediate neighbourhood of the scanning spot, rather than by the potential of the second anode, since a potential difference of 3 or 4 volts between the element which has just been scanned and the element which is just about to be scanned requires a field of the order of 100 volts/cm., while the field due to the saturating potential on the second anode is only of the order of 10 volts/cm. at the mosaic surface.

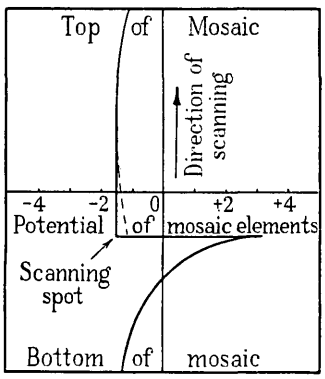

Fig. 5

The application of the saturating potential will, however, result in almost all photo-electrons which are liberated by light at points of the mosaic some distance from the scanning spot being collected by the second anode. Hence, a stronger electrostatic image will be built up than is obtained in the normal working of the tube, and the signals will be proportionately stronger. Because of the saturating field the proportion of secondary electrons that escape from the mosaic will be slightly increased, and the average potential of the mosaic will drift towards the potential of the second anode. Eventually it will reach a new equilibrium potential of a few volts negative with respect to the second anode, and the signals will return to normal. The time taken for the mosaic to reach its new equilibrium potential depends on the scanning beam current and the capacitance of the mosaic elements to the signal plate.

If the potential of the collecting anode could be raised to a sufficiently high value to saturate all the secondary as well as photo-electrons, the number of electrons leaving the mosaic would be independent of the illumination of the scanned element, and consequently no picture signal would be produced. It has not been possible to apply a sufficiently high potential between the second anode and signal plate to realize this state completely, but an applied potential of 750 volts was found to produce initially a weak signal, which increased considerably as the mosaic potential drifted towards second anode potential, passed through a maximum, and then returned to normal.

THE SUPER-EMITRON

Theory of Operation

As described above, the Emitron operates with a low efficiency, of the order of 5 % of the theoretical maximum. The reason for this low efficiency is the lack of saturation of the photo-emission from the mosaic during most of the frame period. Another reason, though probably not so important, is the spread of secondary electrons released by the scanning beam from the mosaic. These secondaries neutralize the charges stored on the mosaic elements and also generate spurious signals, as, for instance, a low-frequency component known as " tilt " which is superimposed on the picture signals. The tilt may be corrected by suitable electrical circuits.*

It was considered† that by separating the two functions of photo-emission and charge storage it might be possible to improve upon the efficiency of the Emitron.

A tube which enables this suggestion to be carried into practice is shown diagrammatically in Fig. 6. The optical picture to be transmitted is focused on a continuous transparent photo-surface P. An electron beam is generated at this surface which varies in density across its cross-section according to the illumination. This electron beam is accelerated by the electrode A_2 and focused electron-optically by means of the magnetic lens L on to the storing mosaic M, which is backed by a signal plate S. The mosaic is not photo-sensitive. The beam of photo-electrons projected on to the mosaic generates there a charge distribution which corresponds to the optical picture on the photo-cathode P. The mosaic is scanned in the usual manner by an electron

* See Reference (16). † *Ibid.*, (17).

beam from a gun G, thus restoring the elements to an equilibrium potential.

There are three striking advantages in the new tube; (1) the improvement in the efficiency of the photo-cathode, (2) the multiplication of the charges on the mosaic by secondary emission, (3) and the improved optical conditions.

In the normal Emitron the photo-sensitivity is limited to about 12 μA/lumen. Continuous photo-cathodes can at present be made with photo-electric sensitivities more than twice that obtained from mosaics in the Emitrons. There are several reasons for this. For one thing, the ratio of the surface covered by photo-electric material in a mosaic to the total area is only of the order of 50 %. Furthermore, the Emitron mosaic has to carry out two functions—it has to emit photo-electrons and to store charges. For storing charges efficiently the insulation between the mosaic elements must be high, and the quantity of caesium which is applied in forming the photo-mosaic is therefore limited as a compromise between sensitivity and insulation.

The other main feature of the new tube is the secondary amplification at the mosaic surface. Under the impact of each photo-electron from the cathode P a number of secondary electrons are liberated at the mosaic and the elements are left with a net positive charge. The sign of the charge stored on the mosaic is the same as in the Emitron, and the signals therefore have the same sense. The amount of charge stored is multiplied according to the secondary emission-coefficient K, the multiplication factor being $(K - 1)$. For caesiated surfaces the factor K is of the order of 7 to 9 for an optimum primary velocity of the electrons of about 400 volts. Therefore, under the same condition and for equal photo-sensitivities it is to be expected that the signal from the new tube should be 6 to 8 times stronger than that from the standard tube.

Comparative measurements have been made on the signal output of a number of Emitrons and Super-Emitrons for equal conditions of illumination and beam current. These measurements showed that for equal photo-sensitivities the new tube gave about 10 to 15 times the signal amplitude of the Emitron. In a few cases the ratio was considerably higher.

This factor, therefore, is too large to be explained in terms of secondary-emission amplification only, but is satisfactorily explained if account is taken of the different velocities of the photo-electric and secondary electrons. As was shown above, the mosaic elements are brought to an equilibrium potential by the scanning beam, which potential is very close to that of the second anode of the gun. The integrating efficiency of the Emitron is small compared with the "line sensitivity," since the photo-electrons can only escape from the elements a short time before the scanning beam strikes them. The photo-electrons released by visible light from the photo-sensitive mosaic have velocities corresponding to approximately 1 electron volt. In the new tube, secondary electrons are released from the mosaic elements. The bulk of these have velocities of several electron volts, and a certain proportion have much higher velocities. They will, therefore, escape more readily under the same field conditions and reach the second anode. This will result in an increase of the integrating efficiency, since a substantial number of electrons will be able to leave the elements between scans. This is confirmed by the observation that fast-moving objects imaged by the new tube leave a blurred trail behind them in the picture, the leading edge being sharp.

Construction

A diagram and a photograph of this type of tube as now in production are shown in Fig. 6 and in Fig. 7 (see Plate 2) respectively.

The electron gun and the mosaic are arranged in the same relative positions as in the Emitron. The chief difference is the addition of the projection neck for the electron optical conversion of the light picture into the electron picture. At the end of this neck is an optically flat window in front of which the photo-cathode is fixed. It is of the transparent type formed on a mica disc approximately 60 mm. in diameter. The cathode is surrounded by a short cylinder for concentrating the photo-electron

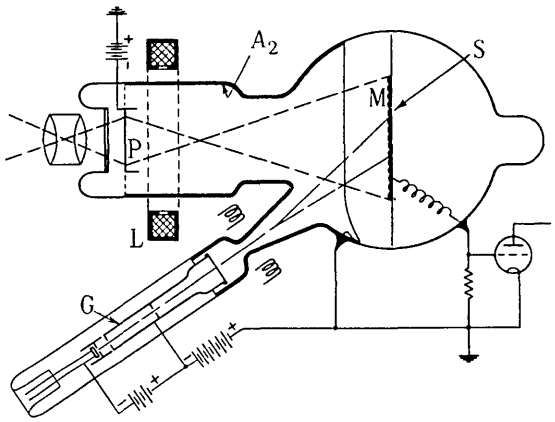

Fig. 6

beam. The second anode of the scanning gun is extended into the projection neck and serves to accelerate the photo-electrons. It is formed by depositing a silver coating on the walls of the tube. The beam of electrons from the photo-cathode is focused on the mosaic by a magnetic lens L of the ironclad type. The coil, however, also produces a rotation of the picture about its axis, and, in order to correct for this rotation, the tube is rotated in the camera through the same angle, and in the same sense. A photograph of the tube in the camera is shown in Fig. 8 (see Plate 2); the focusing coil and the rotation of the tube in the camera are clearly visible. The electron optical magnification between mosaic and photo-cell is approximately 4 : 1. The mosaic consists either of an aggregated aluminium layer on mica or of plain mica which is coated on the back with the usual conductive coating to form the signal plate.

As the size of the optical picture on the photo-cathode is much smaller than that on the mosaic of the Emitron, lenses with shorter focal lengths are used. Furthermore, owing to the increased sensitivity of the new tube, smaller lens apertures can be used for the same illumination

resulting in greatly increased focal depth of the transmitted pictures.

Careful screening in the camera is necessary to prevent interference between scanning and focusing magnetic fields.

When used in this way the new type of tube gives very satisfactory results and has been frequently used by the B.B.C. when the conditions are such that very little light is available or where telephoto lenses are necessary.

The sensitivity of the new type of tube can be still further increased if the electron beam forming the picture is amplified by secondary emission one or more times before reaching the mosaic.* Development along these lines is being carried out and shows considerable promise.

OTHER FORMS OF CATHODE-RAY TUBE

A number of other forms of television tubes which may be mentioned here have been constructed and used experimentally.

The type of tube described above may be used under different operating conditions from those mentioned.† Referring to Fig. 4, if the photo-electrons are accelerated sufficiently to strike the mosaic with a velocity much beyond that corresponding to the second cross-over point B, they will release only a few secondaries and will charge the elements negative. The scanning beam strikes the mosaic with a velocity corresponding to a point between A and B and restores them to an equilibrium potential. A tube operated in this way produced signals the sense of which was opposite to those produced by the standard tube. This method, however, does not give secondary amplification.

Another method is to scan the mosaic with a beam the velocity of which is greater than that corresponding to the second cross-over point.‡ A potential difference is then established between the mosaic and the second anode, which is equal to the difference between the potential of the latter and that of the second cross-over point. If this difference be made large enough, the whole of the emission from the mosaic will be saturated and collected on the second anode. There will be no spread of secondary electrons and therefore no tilt. Furthermore, there will be the full theoretical efficiency due to the complete saturation of all the electrons from the mosaic. The photo-electrons are projected on to the mosaic with a velocity corresponding to the peak of the secondary-emission characteristic in Fig. 4. Those elements which are hit by photo-electrons in the intervals between scans rise in potential and the scanning beam restores them to their equilibrium potential at the second cross-over point. The sense of the signal is the same as that of the standard tube.

As the scanning beam releases very nearly 1 secondary electron per primary, its impedance is very high and consequently large scanning-beam currents must be used in order to restore the elements completely to their equilibrium potential during a single scan. It can easily be shown that an element is restored by the beam to its equilibrium potential exponentially with a time-constant $T = C/(i_p a)$, where C is the element-to-signal plate capacitance, i_p is the primary current in the scanning beam, and a is the slope of the secondary-emission characteristic at the second cross-over point. To ensure complete discharge the time-constant must not exceed about one-third of the time the beam remains on the element. It is necessary, therefore, in order to keep the beam current small, to reduce the element to signal-plate capacitance and to choose a material for the mosaic for which the slope of the secondary-emission characteristic at the second cross-over is as large as possible.

Carbon was found to be the most suitable material for this purpose, and a tube with a carbon mosaic was successfully worked in this way. A very much increased sensitivity and a complete absence of "tilt" were obtained with scanning-beam currents of 55 μA, whereas normally the beam current must be limited to about 0·1 μA to reduce "tilt" to manageable dimensions.

Other forms of tube have been constructed and used in which the necessity for scanning the mosaic at an angle is avoided, and it is therefore unnecessary to supply circuits to correct for trapezium distortion. In the normal Emitron this was done by making the signal plate transparent* and projecting the image on to the mosaic through the signal plate. The sensitivity of such a tube is, however, comparatively low.

Finally, trapezium distortion may also be avoided by using a "double sided" mosaic. In these mosaics the elements are in the form of insulated rivets in a mesh grid which acts as signal plate.† The rivets project on both sides of the grid and may be photo-sensitized on one side. The image is focused on this side and the scanning beam explores the reverse side, the axis of the gun being normal to the plane of the grid. Such double-sided mosaics may also be used in the type of tube where the electron image is focused electron-optically upon the mosaic.‡ In this case it is not necessary to photo-sensitize the rivets.

Acknowledgments

Acknowledgments are due to Mr. I. Shoenberg, the Director of Research; to Mr. G. E. Condliffe; and to the staff of the Research Department, among whom Messrs. L. Klatzow, J. E. I. Cairns, and H. Miller, should be mentioned.

REFERENCES

(1) *Nature*, 1908, vol. 78, p. 151.
(2) *Journal of the Röntgen Society*, 1912, vol. 8, p. 7.
(3) *Nature*, 1926, vol. 118, p. 590.
(4) *Proceedings of the Physical Society*, 1938, vol. 50, p. 374.
(5) See, for example, BLAKE and SPOONER: British Patent No. 234882, 28/2/1924.
(6) SCHRÖTER: "Handbook of Picture Telegraphy and Television," p. 61 (Julius Springer, Berlin, 1932.)
(7) ZWORYKIN: U.S.A. Patent No. 1691324, 13/7/1925.
(8) *Journal I.E.E.*, 1933, vol. 73, p. 437.
(9) TEDHAM and McGEE: British Patent No. 406353, 25/8/1932.

* See Reference (18). † *Ibid.*, (19). ‡ *Ibid.*, (20).

* See Reference (21). † *Ibid.*, (7). ‡ *Ibid.*, (17).

(10) KEYSTON, NICOLL, and KLEMPERER: British Patent No. 458746, 19/3/1935 and 7/5/1935.
(11) MILLER and CAIRNS: British Patent No. 487833, 22/12/1936.
(12) ESSIG: British Patent No. 407521. Convention date U.S.A. 24/2/1932.
(13) BEILBY: "Aggregation and Flow of Solids," Plates II and III, Figs. 2–4 (Macmillan, London, 1921).
(14) MCGEE: British Patent No. 419452, 5/5/1933.
(15) ZWORYKIN, MORTON, and FLORY: *Proceedings of the Institute of Radio Engineers*, 1937, vol. 25, p. 1074.
(16) BLUMLEIN, BROWNE, DAVIS, and GREEN: "The Marconi-E.M.I. Television System," *Journal I.E.E.*, 1938, vol. 83, p. 758.
(17) LUBSZYNSKI and RODDA: British Patent No. 442666, 12/5/1934. At about this time, work on the same lines was commenced in America (see IAMS and ROSE: *Proceedings of the Institute of Radio Engineers*, 1937, vol. 25, p. 1067).
(18) LUBSZYNSKI and KEYSTON: British Patent No. 457493, 30/5/1935.
(19) LUBSZYNSKI and RODDA: British Patent No. 455085, 9/2/1935.
(20) LUBSZYNSKI: British Patent No. 475928, 20/5/1936.
(21) LUBSZYNSKI and MCGEE: British Patent No. 455123, 9/2/1935.

DISCUSSION BEFORE THE WIRELESS SECTION, 7TH DECEMBER, 1938, ON THE PAPERS BY MESSRS. CORK AND PAWSEY (SEE PAGE 111) AND MESSRS. McGEE AND LUBSZYNSKI (SEE PAGE 131)

Mr. L. H. Bedford: With regard to the paper by Messrs. Cork and Pawsey, it is a matter for some surprise that so high a degree of adjustment and refinement in regard to feeders and terminations is either necessary or possible. It would seem, however, that the accuracy of the results given may be somewhat artificial. On the one hand, we are working in zones where the impedance of 1 in. of wire is very high relatively to the impedance changes concerned; on the other hand, it may be questioned whether the representation of a feeder as a distributed inductance and capacitance can be pushed this far, bearing in mind that this representation is after all only an approximate form of a complicated field theory. The results, however, appear to be adequately justified in practice, not only as shown by the authors' curves but also as seen by any viewer whose receiver does not itself introduce more frequency distortion than that with which the authors are concerned.

The paper by Messrs. McGee and Lubszynski considerably clarifies the relation between the Emitron and the Iconoscope. It would appear from the data given that the distinction is perhaps more one of history than of function.

The great advance which has been made in transmission in the last 2 years is largely attributable to improvement in the Emitron camera, but there is still a shortcoming in connection with film transmission. In my opinion the use of a Mechau projector is not an entirely elegant solution to the problem, and in practice there are evidently great difficulties of adjustment, as is evidenced by the frequent occurrence of flicker or differential illumination of the interlaced rasters. The original method employing intermittent film movement and making use of the "memory" of the Emitron was theoretically more elegant, and failed only because of the imperfect memory characteristics of the Emitron. The paper clarifies this phenomenon and would indicate that with developments along the lines of the Super-Emitron a reversion to the original film method might be contemplated.

Mr. D. C. Birkinshaw: At the time of installation of the feeder Messrs. Cork and Pawsey were apprehensive of the effect of weather upon it; they thought that damp conditions might lower the feeder resistance, and possibly introduce capacitance variation. Measurements made over the last 2 years, however, show that the resistance of the feeder is more than 10 megohms in dry weather, and never descends below about 30 000 ohms in wet conditions. There is also no evidence that weather conditions introduce any capacitance variations. Although means have been provided for electrically drying out the feeder if necessary, it has so far been unnecessary to bring them into operation.

One interesting feature of the feeder which is not mentioned in the paper is the fact that it was unfortunately impossible in one case to obtain a pipe of the correct diameter for the inner conductor in connection with the first transformation to 78·5 ohms, and it was necessary, therefore, to transform to an impedance somewhat greater than this figure, and insert a further transforming section to correct for the error.

Turning to the paper by Messrs. McGee and Lubszynski, I should like to mention that in the early days of the Emitron its colour response was characterized by an emphasis of the red and infra-red end of the spectrum. This introduced certain make-up problems, and gave the picture a peculiar appearance similar to that of a photograph taken on an infra-red-sensitive plate. This was undesirable, and was later overcome, and the tubes now have their peak response in the green region. This considerably improves the quality of the picture, and lessens the difficulty of the make-up problem. I should like to ask the authors how this change in colour response was effected.

Mr. D. C. Espley: Messrs. Cork and Pawsey state that the feeders work from a transmitter termination of 50 ohms to an aerial impedance of about 20 ohms. Is it not possible to use a feeder of lower characteristic impedance? It seems to me that the only limitation would be the voltage on the feeder (about 1 100 volts at present). The change could be made by increasing the diameter of the inner conductor, or preferably by reducing the outer, and in this connection it would be interesting to know the significance of the radius ratio of 3·6. I cannot see why it should be so important to keep to the optimum