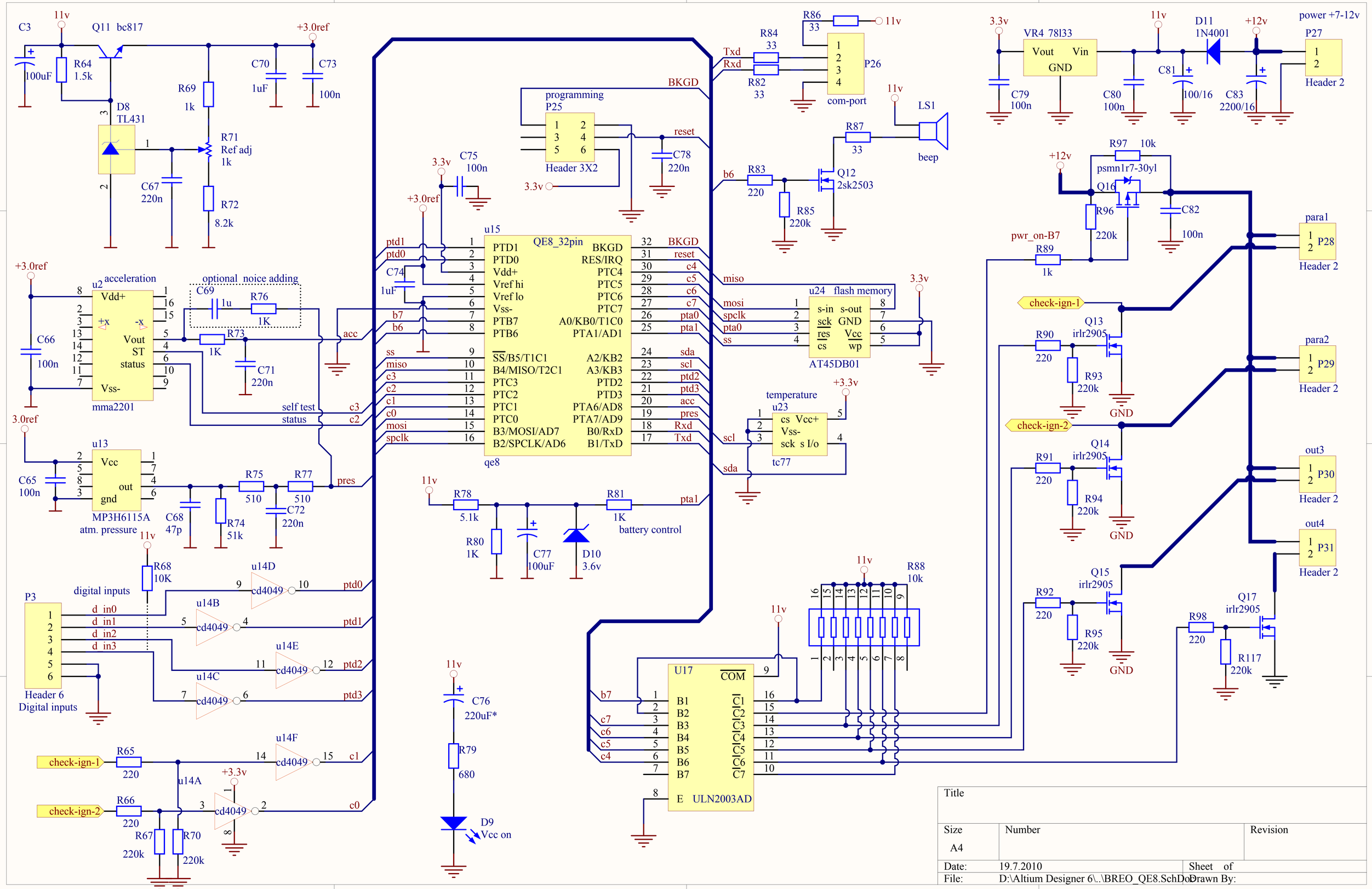

Title		
Size A4	Number	Revision
Date: 19.7.2010		Sheet of
File: D:\Altium Designer 6\..\BREO_QE8.SchDoc		Drawn By: