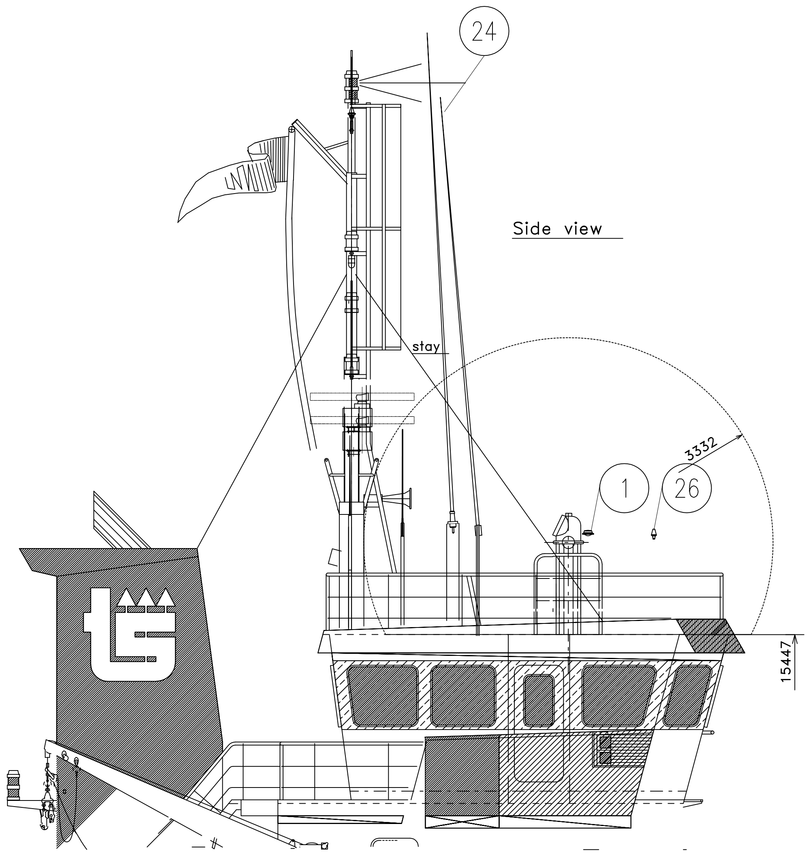

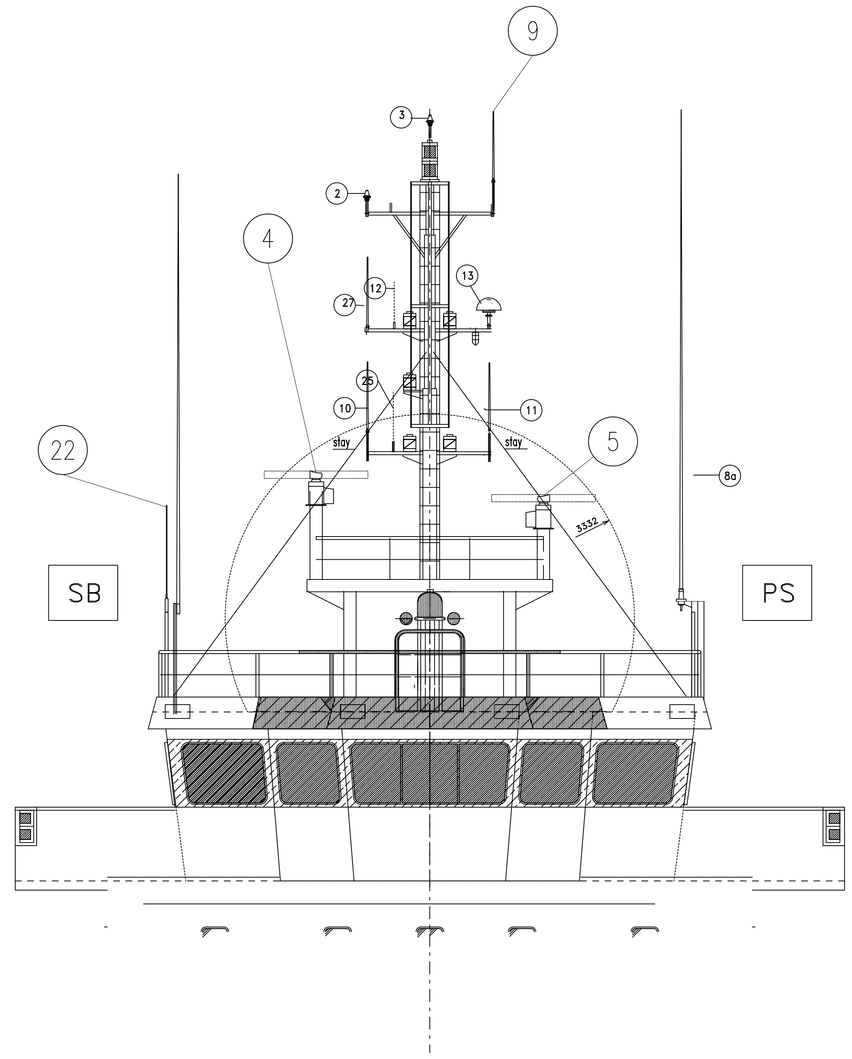

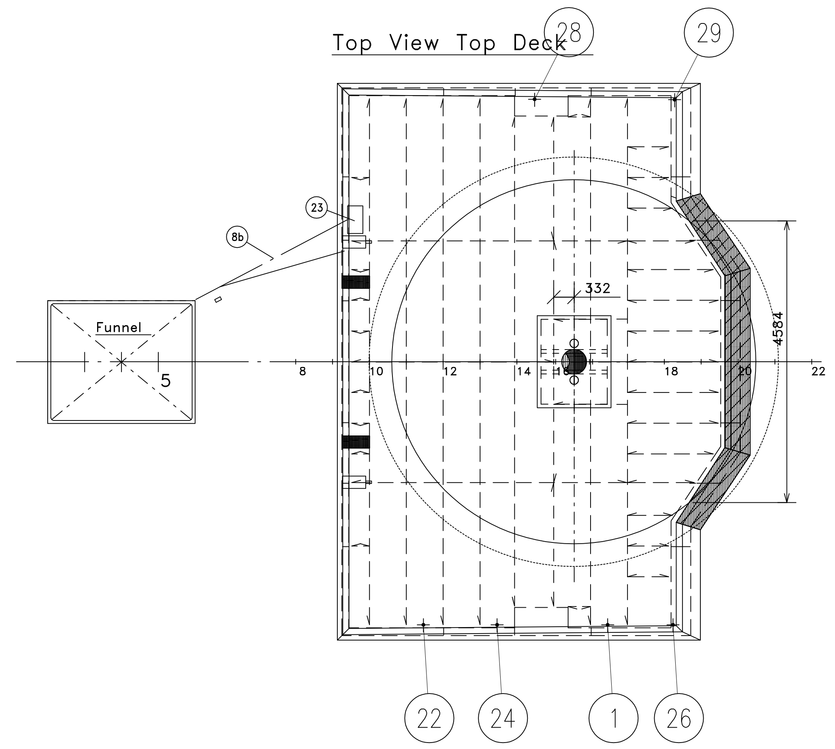

NR.	Part	Position		Delivery	Type
1	DGPS NAVIGATOR ANTENNA	AERIAL BOW	SB	SAM ELECTRONICS	GN33D
2	INMARSAT C SATCOM 1 ANTENNA	AFT MAST	PS	SAM ELECTRONICS	TT3005M
3	INMARSAT C SATCOM 2 ANTENNA	AFT MAST	SB	SAM ELECTRONICS	TT3005M
4	RADAR ANTENNA	AFT MAST	CL	SAM ELECTRONICS	GR3017 5 FT
5	RADAR ANTENNA	BRIDGEDECK	PS	SAM ELECTRONICS	GR3017 5 FT
7	RADAR PERFORMANCE MONITOR	AFT MAST	SB		PM 30
8a	RADIO TELEPHONE MF/HF ANTENNA	AFT MAST	PS	SAM ELECTRONICS	AT-82 D
8b	RADIO TELEPHONE MF/HF WIREANTENNA	AFT MAST/FUNNEL	PS	SAM ELECTRONICS	
9	VHF 1 ANTENNA	AFT MAST	PS	SAM ELECTRONICS	CXL2-1
10	VHF 2 ANTENNA	AERIAL BOW	SB	SAM ELECTRONICS	CXL2-1
11	VHF DSC ANTENNA	AFT MAST	SB	SAM ELECTRONICS	CXL2-1
12	MOBILE PHONE ANTENNA	AERIAL BOW	SB		CXL-900/3 0.66m
13	AM/FM/TV ANTENNA	AFT MAST	SB		
22	NAVTEX RECEIVER ANTENNA	AFT MAST	PS	SAM ELECTRONICS	NT900
23	RADIO TELEPHONE MF/HF TUNING DEVICE	TOPDECK	PS	SAM ELECTRONICS	FURUNO DEBEG 3123
24	MF/HF DSC WATCH RECEIVER	AFT MAST	SB	SAM ELECTRONICS	AR72
25	ATF ANTENNA FAX	AFT MAST	PS		
26	AIS GPS ANTENNA	AFT MAST	PS	SAM ELECTRONICS	
27	AIS VHF ANTENNA	AFT MAST	PS	SAM ELECTRONICS	CXL2-1
28	VHF2 DSC ANTENNA	AFT MAST	PS	SAM ELECTRONICS	CXL2-1
29	IRIDIUM SSAS	AFT MAST	PS		

INSTALHO BV
SCHEEPSBOUW
Beatrixhaven 13
4251 NK Werkendam
Telefoon +31 (0)183-503111
Telefax +31 (0)183-503132
E-mail info@instalho.nl

DATE	Approved: yard	Date:	Approved: class.	Date:
	Approved: owner	Date:	Approved: auth.	Date:

DRAWN

VUYK ENGINEERING GRONINGEN
Vuyk Engineering Groningen B.V.
Naval architects, Marine engineers, Consultants
P.O.Box 204, 9700 AE Groningen
Phone +31 (0)50 575 39 50
Fax +31 (0)50 575 39 51
Website www.vuykengineering.com

REMARKS

Aerial Arrangement

SCALE	1:50	OWNER	Instalho BV		No. of Sh.
DRAWN	JH	YARD			1
DATE	29-07-05	B. No.	Bn. 349		
CH		Proj.	03.012	Draw 0047	Sheet
CH P.I.					1

NO. E D C B A

NOTICE : This drawing and the information it contains are the property of VUYK ENGINEERING GRONINGEN B.V. and may not be reproduced or used in part or in whole for any purpose except by written permission of this company.

Plotdate: 29-07-2005 11:14:43

Drawing: /veg03.012/047/sheet/047-2-aerial-arrangement.mod